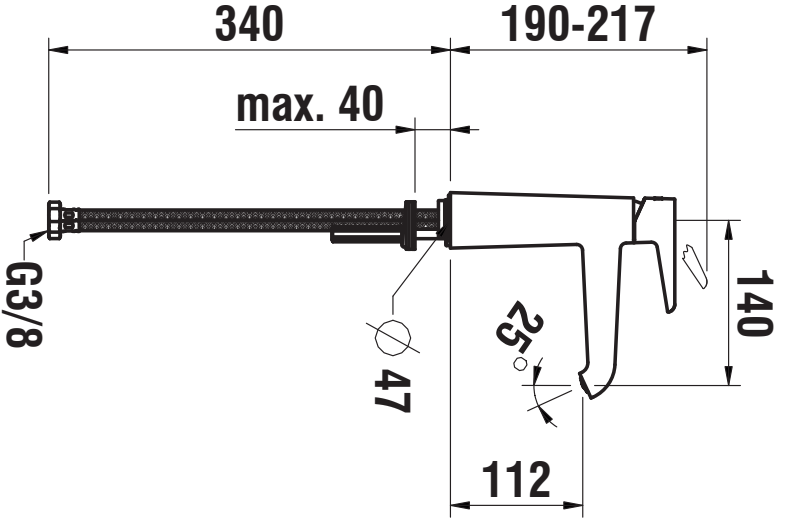
340
190-217
max. 40
G3/8
⌀ 47
25°
140
112