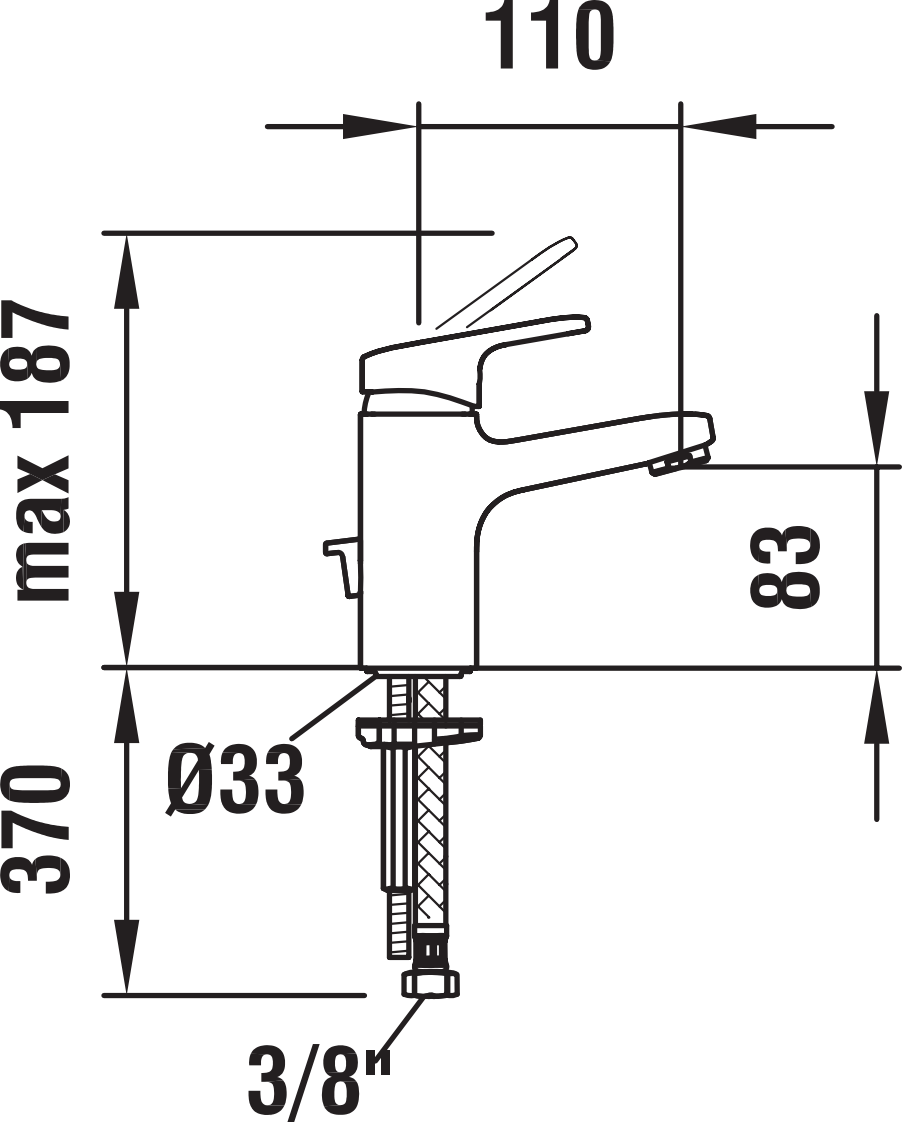
110
max 187
83
370
Ø33
3/8"